SG 125

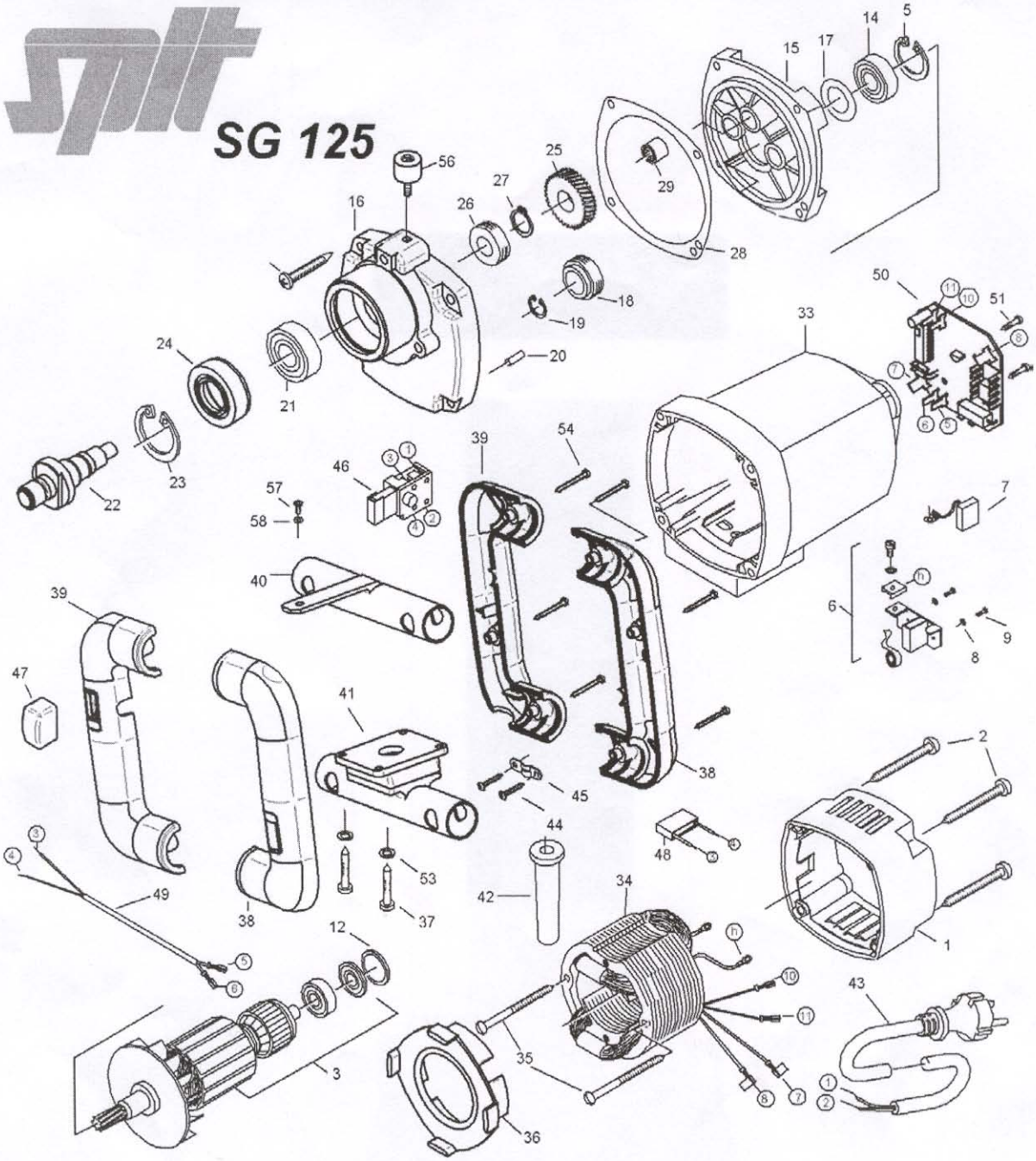

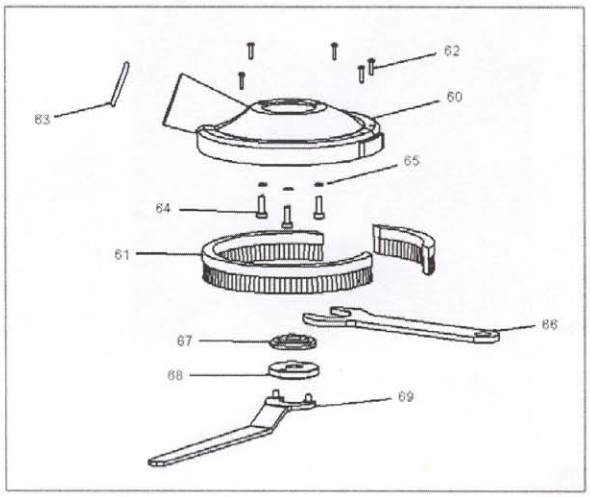

Ruben Bernaert update 08-10-02

DIAMOND INDUSTRIAL UNIT

SPARE PARTS LIST

Product name : SPIT SG 125 230 V

Update : 12/09/2002

Last Update 9/10/2002

Position N°	SPIT code	Description	Remarks
1	620821	Cap	
2	620822	Self tapping screw HC 4,8 x 45	
3	620823	Rotor compl. 230.V	
4	620824		
5	620825	Safety ring 28 / 1,2	
6	620826	Brush holder compl.	
7	620827	Brushes 6,3 x 10 x 18	
8	620828	Spring washer B 4	
9	620829	Screw ZM 4 x 12	
12	620830	O-Ring 22 x 2,5	
13	620831	Self tapping screw HC 4,8 x 38	
14	620832	Grooved ball bearing 6902 2Z	
15	620833	End shield of gearing	
16	620834	Gearbox housing	
17	620835	Fitting washer	
18	620836	Worm seal 1	
19	620837	Safety ring 15 / 1	
20	620838	Notched pin 4 x 12	
21	620839	Grooved ball bearing 6003 2RS	
22	620840	Work spindel	
23	620841	Safety ring 40 / 1,75	
24	620842	Washer for bearing	
25	620843	Spindle wheel 22 Z	
26	620844	Worm seal	
27	620845	Safety ring 14 / 1	
28	620846	Gearbox sealing	
29	620847	Needle bearing HK 0810	
33	620848	Motor housing	
34	620849	Stator compl. 230.V	
35	620850	Self tapping screw C3,9 x 60	
36	620851	Air guiding ring	
37	620852	Screw Torx 5 x 20	
38	620853	Frame handle	
39	620854	Switch Frame handle	
40	620855	Tube 1	
41	620856	Tube 2	
42	620857	Cable grommet	
43	620858	Connecting cable	
44	620859	Self tapping screw	
45	620860	Wire locking flange	
46	620861	Switch	

Position N°	SPIT code	Description	Remarks
47	620862	Dust protection	
48	620863	Anti parasit condenser	
49	620864	Strand	
50	620865	Conductor plate	
51	620866	Self tapping screw	
53	620867	Spring ring	
54	620868	Self tapping screw HC 4,8 x 32	
56	620869	Anti vibration rubber M 6	
57	620870	Screw M 6 x 8	
58	620871	Washer 6,4	
60	620872	Dust protection flange	
61	620873	Brush ring	
62	620874	Screw HC 2,9 x 13	
63	620875	O - Ring 35 / 4	
64	620876	Screw M 5 x 12	
65	620877	Feather washer	
66	620878	Spanner 32	
67	620879	Inner flange	
68	620880	Outer flange	
69	620881	Pinn spanner 16/2	
70	620882	Metal box SG.125	
	620820	0perater's Manual SG 125	